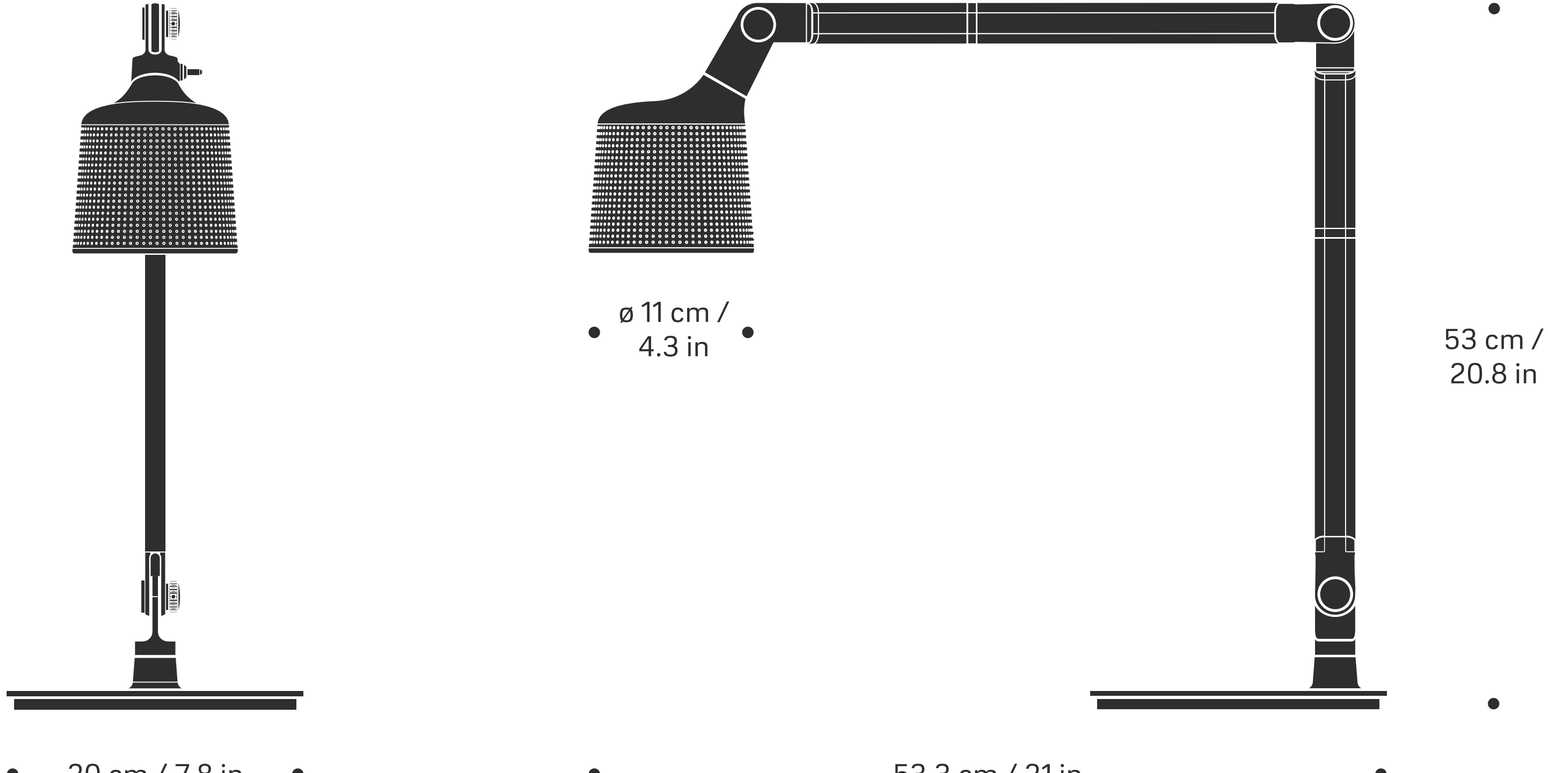
ø 11 cm /
4.3 in
53 cm /
20.8 in
20 cm / 7.8 in
53.3 cm / 21 in